W. A. THOMPSON.

Ox-Yoke.

No. 67,819. Patented Aug 13, 1867.

Fig. 1.

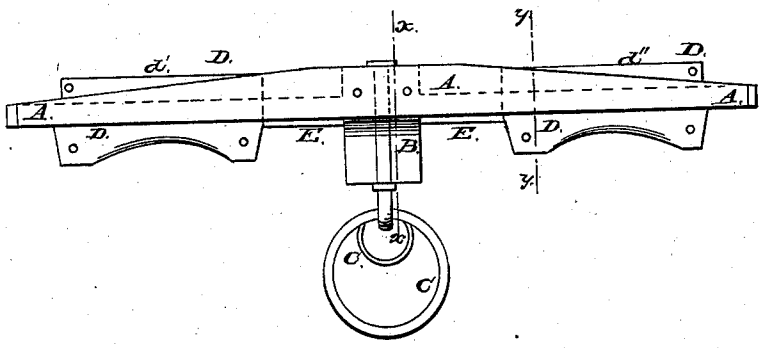

Fig. 2.

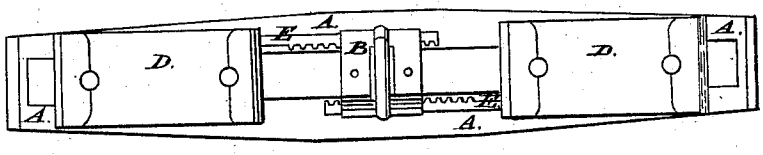

Fig. 4.

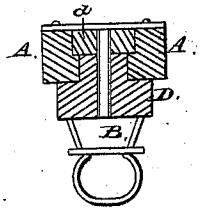

Fig. 3.

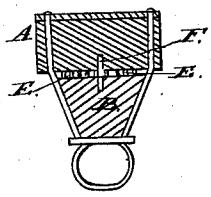

Witnesses.

Wm Dean Overall

Fred B. Miles

Inventor:

W. A. Thompson

per Munn & Co

Attorneys

N. PETERS, PHOTO-LITHOGRAPHER, WASHINGTON, D. C.

United States Patent Office.

WARREN A. THOMPSON, OF WEST WINSTED, CONNECTICUT.

Letters Patent No. 67,819, *dated August* 13, 1867.

IMPROVEMENT IN OX-YOKE.

The Schedule referred to in these Letters Patent and making part of the same.

TO ALL WHOM IT MAY CONCERN:

Be it known that I, WARREN A. THOMPSON, of West Winsted, in the county of Litchfield, and State of Connecticut, have invented a new and improved Ox-Yoke; and I do hereby declare that the following is a full, clear, and exact description thereof, which will enable others skilled in the art to make and use the same, reference being had to the accompanying drawings, forming part of this specification, in which—

Figure 1 is a side view of my improved ox-yoke.

Figure 2 is an under side view of the same.

Figure 3 is a cross-section of the same, taken through the line *x x*, fig. 1.

Figure 4 is a cross-section of the same, taken through the line *y y*, fig. 1.

Similar letters of reference indicate like parts.

My invention has for its object to so improve the construction of ox-yokes as to diminish their weight, and increase their strength and durability; and it consists in forming grooves in the slotted yoke upon each side of the said slots, in which the neck-blocks slide, for the reception of the top caps.

A is the body of the yoke, which is slotted longitudinally from near its ends to the centre-block B that supports the rings C, to which the tongue and draught-chains are attached. The body A of the yoke, upon its upper side, is grooved or rabbeted, as shown in fig. 4, to receive the top caps *d'* of the neck-blocks D. This enables the body of the yoke to be made thick at the centre and thin at the ends, greatly increasing its strength and making it much lighter, while at the same time the neck-blocks D can slide freely back and forth. To the neck-blocks D are securely attached the ends of the racks or toothed arms E, in such position that they may slide back and forth along the under side of the body of the yoke, their forward ends passing through grooves in the centre-block B, and their teeth meshing into the teeth of the gear-wheel F, pivoted in a recess formed in the centre-block B for its reception, the said racks E passing upon opposite sides of the said gear-wheel, as shown in figs. 2 and 3, so that as either one of the neck-blocks is moved either from or towards the centre-block B, the other also will be moved in the same manner, and both be kept at the same distance from the point at which the draught is attached. The racks E I make of wrought iron, so that I am able to diminish their size and weight, while at the same time I greatly increase their strength, rendering them comparatively indestructible.

By these improvements I am able to furnish yokes one hundred per cent. stronger and twenty per cent. lighter than yokes of this class have heretofore been made.

I am aware of the patent granted to John Tucker, March 15, 1865, in which neck-blocks are used sliding upon iron rods, but as these form no part of my invention, I do not claim them.

Having thus described my invention, what I claim as new, and desire to secure by Letters Patent, is—

The top caps *d'* of the neck-block D, sliding longitudinally in the channels formed in the upper sides of the slots of the body A, in combination with the devices as shown, when constructed and operating as herein set forth, and for the purposes specified.

The above specification of my invention signed by me this 11th day of February, 1867.

WARREN A. THOMPSON.

Witnesses:

HIRAM PERKINS,

O. F. PERKINS.