J. H. Whitney.
Ox Yoke.
No. 46,742. Patented Mar. 7, 1865.

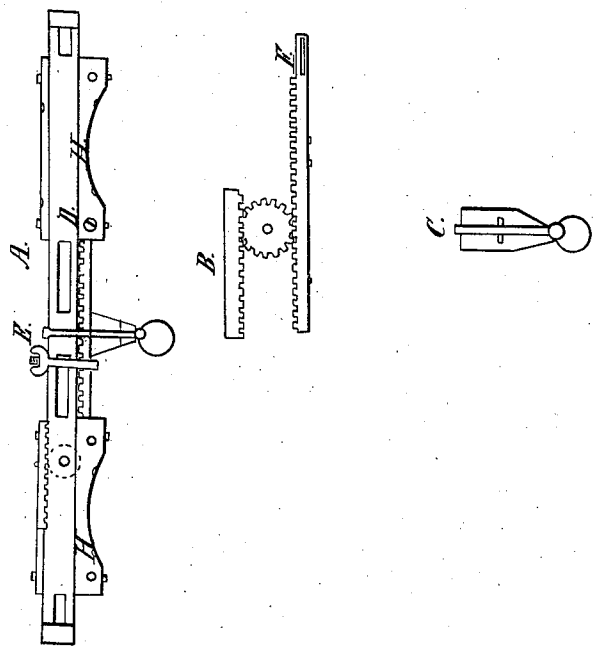

Witnesses.

E. S. Woodford

Ann E. Woodford

Inventor.

John H. Whitney

UNITED STATES PATENT OFFICE.

JOHN H. WHITNEY, OF SANDISFIELD, MASSACHUSETTS

IMPROVEMENT IN OX-YOKES.

Specification forming part of Letters Patent No. 46,742, dated March 7, 1865.

To all whom it may concern:

Be it known that I, JOHN H. WHITNEY, of Sandisfield, Berkshire county, Massachusetts, have invented a new and Improved Ox-Yoke; and I do hereby declare that the following is a full and exact description thereof, reference being had to the accompanying drawings, and to the letters of reference marked thereon.

The nature of my invention consists in constructing and arranging the bow-block and its attachments through which the bows pass in such a manner that the yoke may readily be adjusted to an immovable bow-slide, or movable, or so as to give either ox the long or short arm of the lever, as desired.

The nature of my invention I will give, so as to enable others skilled in the art to make and use it. It is as follows: The neck-block of the yoke H H, through which the bows are set, is so arranged upon a rectangular frame as to approach toward and recede from the center of the yoke, severally guided by a geared rack attached to one neck-block extending from it through the ring-block to a pinion attached to the frame of the yoke over the other neck-block, which pinion operates upon another geared rack attached to the cap of the said neck-block last mentioned. I attach a thumb-screw to a hook passing through the frame of the yoke under the long geared rack, which, by screwing up, makes a set-yoke, preventing either neck-block from moving.

By a screw (as seen in the drawing) D, the arm of the lever is readily regulated. That screw goes through a slot in the end of the geared rack into a nut on the opposite side of the rack. By loosening this screw the rack is moved so as to give either ox the long or short lever, the other ox the corresponding short or long lever. While the screw is tight each ox sustains his relative length of lever however the bow-blocks move.

In the accompanying drawings, A is a side view of the yoke. B is a view of the geared rack as seen on the under side of the yoke, and the bow-slide attached to the cap with the pinion between. C is the ring and staple. D is the fulcrum-screw which regulates the lever by which each ox is compelled to work. E is a set thumb-screw to prevent or otherwise the bow-slides from moving. F is the slot through which the screw operates to determine the length of lever by which each ox must work.

I do not claim the devices for the simultaneous movement of the bow-slides, as such are not new.

I claim—

The adjustifiable fulcrum-screw D and the thumb-screw E in combination with the bow-slides H, as and for the purposes set forth.

JOHN H. WHITNEY.

Witnesses:

HARVEY BENTS,

HARRISON J. WHITNEY