(No Model.)

J. S. VALENTINE.

OX YOKE.

No. 382,570. Patented May 8, 1888.

Fig. 1.

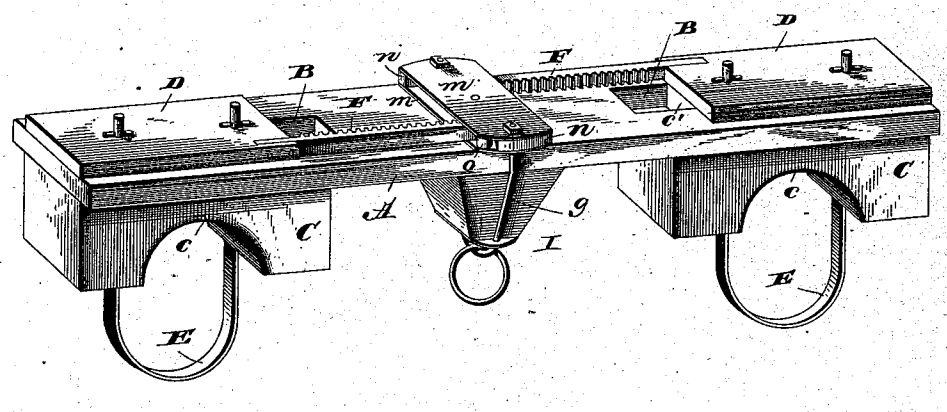

Fig. 2.

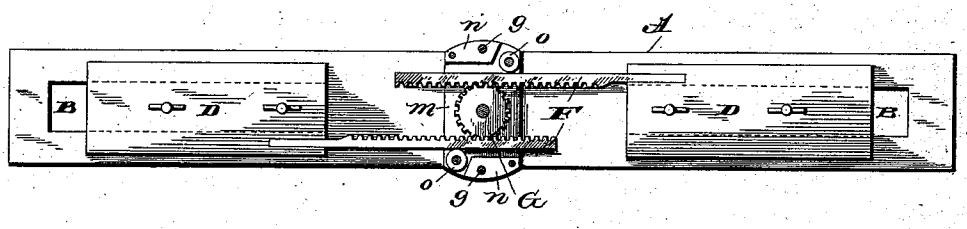

Fig. 3.

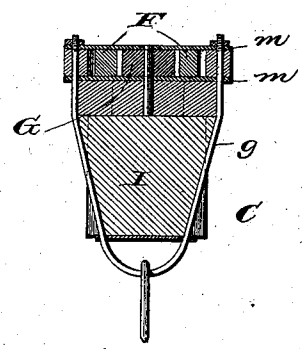

WITNESSES

G. S. Elliott,

E. M. Johnson

Julius S. Valentine.

INVENTOR.

Attorney.

N. PETERS, Photo-Lithographer, Washington, D. C.

UNITED STATES PATENT OFFICE.

JULIUS S. VALENTINE, OF ALBION, MICHIGAN.

OX-YOKE.

SPECIFICATION forming part of Letters Patent No. 382,570, dated May 8, 1888.

Application filed March 8, 1888. Serial No. 266,509. (No model.)

To all whom it may concern:

Be it known that I, JULIUS S. VALENTINE, a citizen of the United States of America, residing at Albion, in the county of Calhoun and State of Michigan, have invented certain new and useful Improvements in Neck-Yokes for Oxen; and I do hereby declare the following to be a full, clear, and exact description of the invention, such as will enable others skilled in the art to which it appertains to make and use the same, reference being had to the accompanying drawings, and to letters or figures of reference marked thereon, which form a part of this specification.

My invention relates to certain new and useful improvements in neck-yokes for oxen; and it consists in the construction and combination of the parts, as will be hereinafter fully set forth, and specifically pointed out in the claims.

In the accompanying drawings, which illustrate my invention, Figure 1 is a perspective view. Fig. 2 is a top view, one of the plates being removed therefrom to better show the construction. Fig. 3 is a vertical sectional view.

A refers to the main bar of the neck-yoke, which is provided near its ends with slots B B, within which the neck-pieces C C move. The neck-pieces C C are provided on their under sides with recesses *c c*, which fit upon the necks of the oxen. The upper portion of these neck-pieces C C have either formed thereon or attached thereto blocks or strips *c'*, which are of less length than the slots B, so that the neck-pieces will be permitted to have a movement within the slots, and above the blocks *c*, so as to lie over the longitudinal edges of the slots, are plates D, which are suitably secured to the blocks *c'*. The bows E E pass through perforations adjacent to the recesses in the neck-pieces through the blocks *c'*, and through the pieces D D, and said bows are secured in place by suitable pins.

To each of the plates D D are secured rack-bars F F, the teeth of which engage with a pinion, G, which is carried by a frame secured to the center portion of the bar A by means of a bent bar, *g*, which bent bar also serves to hold in place a depending block, I. A ring is attached to the bar *g*, through which the pole passes.

The frame which supports the pinion G consists of upper and lower plates, *m m*, between which are placed the blocks *n n*, for holding the plates apart, and between these plates are interposed rollers *o o*, which bear upon the back of the rack-bars, so as to hold them in engagement with the pinion.

By the use of the hereinbefore-described device the oxen will be kept at an equal distance from the pole, so that they will draw equally, and will not swing the pole or cart from side to side.

I am aware that prior to my invention it has been proposed to provide ordinary neck-yokes with a pinion and rack-bars, as shown in Patent No. 307,474, and I do not claim such construction, broadly, as my invention; but

What I claim as new, and desire to secure by Letters Patent, is—

1. The combination, in a neck-yoke for oxen, of a slotted bar, A, provided on its upper side with a frame carrying a central pinion and rollers *o o*, neck-pieces C C, having blocks *c'* and plates D, and rack-bars F F, attached to the plates D, substantially as shown, and for the purpose set forth.

2. The combination, in a neck-yoke for oxen, of a bar, A, having end slots, neck-pieces C C, carrying bows E, rack-bars F, meshing with the central pinion, and rollers *o o*, for holding the rack-bars against the pinion, the parts being organized substantially as shown, and for the purpose set forth.

3. The combination, in a neck-yoke for oxen, of a bar, A, provided with end slots, B B, a frame carrying a pinion and rollers attached to the central portion of the bar A, and depending block I, neck-pieces C C, having blocks *c'*, and plates D, bows carried thereby, and rack-bars secured to the plates D, the parts being organized substantially as shown, and for the purpose set forth.

In testimony whereof I affix my signature in presence of two witnesses.

JULIUS S. VALENTINE.

Witnesses:

HENRY M. DEARING,

LUTHER E. LOVEJOY.